BOCAS NORMAIS PARA BUEIRO SIMPLES TUBULAR DE CONCRETO
DRENAGEM PARA TRANSPOSIÇÃO DE TALVEGUES

BUEIRO SIMPLES TUBULAR DE CONCRETO BOCAS NORMAIS E ESCONSAS (I)

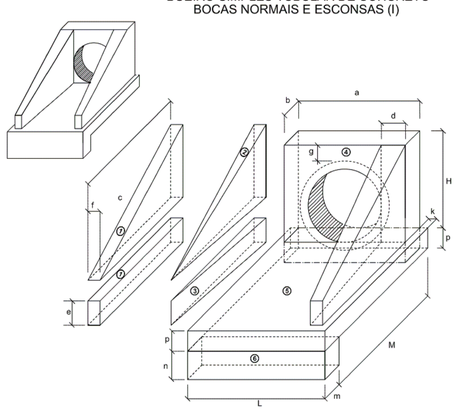

1-VOLUMES

a) ALAS

① PRISMAS : $V = c\,f\,[\,h + e\,]$

② PIRÂMIDES : $V = 2/3\ c\,[(d - f)\,h - e\,k]$

③ CUNHAS : $V = c\,e\,(d - f)$

b) TESTA

④ TESTA : $V = b\,[a\,(h+k) - \frac{\pi\,D^2_{int}}{4}]$

c) CALÇADA

⑤ CALÇADA : $V = p\,c\,L + \beta_L\,(b+k) - a\,b]$

⑥ DENTE : $V = L\,m\,n$

2-ÁREA DAS FORMAS

a) ALAS

Partes Laterais : $A = (h + e)\,(c + \sqrt{c^2 + (d - f)^2})$

Extremidades : $A = 2\,e\,f$

b) TESTA

Parte Posterior : $A = \frac{1}{\cos\theta}\,(a\,h - \frac{\pi\,D^2_{int}}{4})$

Parte Anterior : $A = \frac{1}{\cos\theta}\,(D_{ext}\,h - \frac{\pi\,D^2_{int}}{4})$

Partes Laterais : $A = 2\,b\,h$

TABELA DAS DIMENSÕES E DOS QUANTITATIVOS DOS MATERIAIS PARA AS GALERIAS
DRENAGEM PARA TRANSPOSIÇÃO DE TALVEGUES

TABELA DAS DIMENSÕES E DOS QUANTITATIVOS DOS MATERIAIS PARA AS GALERIAS

SEÇÃO L x 250		0 a h ≤ 100				100 a h ≤ 250				250 a h ≤ 500				500 a h ≤ 750				750 a h ≤ 1000				1000 a h ≤ 1250				1250 a h ≤ 1500			
fck ≥ MPa		0,10	0,21	0,21		0,11	0,21	0,21		0,16	0,23	0,23		0,21	0,28	0,28		0,25	0,32	0,33		0,30	0,36	0,39		0,36	0,41	0,45	
MEDIDAS	UNID.	SIMPLES	DUPLO	TRIPLO		SIMPLES	DUPLO	TRIPLO		SIMPLES	DUPLO	TRIPLO		SIMPLES	DUPLO	TRIPLO		SIMPLES	DUPLO	TRIPLO		SIMPLES	DUPLO	TRIPLO		SIMPLES	DUPLO	TRIPLO	
A	cm	290	545	810	290	545	810	290	560	830	300	560	830	300	575	850	310	575	850	320	575	850	320	575	850	320	575	850	320
B	cm	290	280	280	290	280	280	290	290	290	300	290	290	300	300	300	310	300	300	320	300	300	320	300	300	320	300	300	320
C	cm	320	575	840	320	575	840	320	590	860	330	590	860	330	605	880	340	605	880	350	605	880	350	605	880	350	605	880	350
e	cm	15	15	15	15	15	15	15	15	15	15	15	15	15	15	15	25	15	15	25	15	15	25	15	15	25	15	15	25
b	cm	---	45	45	---	45	45	---	45	45	---	45	45	---	45	45	---	45	45	---	45	45	---	45	45	---	45	45	---
d	cm	20	15	15	20	15	15	20	20	20	25	20	20	25	25	25	30	25	25	30	25	25	35	25	25	35	25	25	25
LASTRO	m³	0,32	0,58	0,84	0,32	0,58	0,84	0,32	0,59	0,86	0,33	0,59	0,86	0,33	0,61	0,88	0,34	0,61	0,88	0,35	0,61	0,88	0,35	0,61	0,88	0,35	0,61	0,88	0,35
FÔRMA	m²	13,20	20,00	27,20	13,20	20,00	27,20	13,20	20,20	27,40	13,40	20,20	27,40	13,40	20,40	27,60	13,60	20,40	27,60	13,80	20,40	27,50	13,80	20,40	27,50	13,80	20,40	27,50	13,80
CONCRETO	m³	2,21	2,84	4,25	2,21	2,84	4,25	2,21	3,92	5,64	2,80	3,92	5,64	2,80	4,83	7,07	3,48	4,83	7,07	4,12	4,83	7,07	4,12	4,83	7,07	4,12	4,83	7,07	4,12
REVESTIMENTO	m²	0,13	0,25	0,38	0,13	0,25	0,38	0,13	0,25	0,38	0,13	0,25	0,38	0,13	0,25	0,38	0,13	0,25	0,38	0,13	0,25	0,38	0,13	0,25	0,38	0,13	0,25	0,38	0,13

SEÇÃO L x 300		0 a h ≤ 100				100 a h ≤ 250				250 a h ≤ 500				500 a h ≤ 750				750 a h ≤ 1000				1000 a h ≤ 1250				1250 a h ≤ 1500			
fck ≥ MPa		0,12	0,21	0,21	0,12	0,21	0,21	0,17	0,21	0,23	0,22	0,28	0,29	0,27	0,32	0,33	0,31	0,36	0,39	0,37	0,42	0,45							
MEDIDAS	UNID.	SIMPLES	DUPLO	TRIPLO	SIMPLES	DUPLO	TRIPLO	SIMPLES	DUPLO	TRIPLO	SIMPLES	DUPLO	TRIPLO	SIMPLES	DUPLO	TRIPLO	SIMPLES	DUPLO	TRIPLO	SIMPLES	DUPLO	TRIPLO							
A	cm	350	660	980	350	660	980	360	675	1000	360	675	1000	370	690	1020	370	690	1020	380	690	1020							
B	cm	350	340	340	350	340	340	360	350	350	360	350	350	370	360	360	370	360	360	380	360	360							
C	cm	380	690	1010	380	690	1010	390	705	1030	390	705	1030	400	720	1050	400	720	1050	410	720	1050							
e	cm	15	15	15	15	15	15	25	15	15	25	15	15	25	25	25	25	25	25	30	25	25							
b	cm	---	45	45	---	45	45	---	45	45	---	45	45	---	75	75	---	75	75	---	75	75							
d	cm	25	20	20	25	20	20	30	25	25	30	25	25	35	30	30	35	30	30	40	30	30							
LASTRO	m³	0,38	0,69	1,01	0,38	0,69	1,01	0,39	0,71	1,03	0,39	0,71	1,03	0,40	0,72	1,05	0,40	0,72	1,05	0,41	0,72	1,05							
FÔRMA	m²	15,90	24,20	32,90	15,90	24,20	32,90	16,10	24,40	33,10	16,10	24,40	33,10	16,30	24,20	32,80	15,60	24,20	32,80	16,50	24,20	32,80							
CONCRETO	m³	3,30	4,62	6,64	3,30	4,62	6,64	4,09	5,81	8,32	4,09	5,81	8,32	4,82	7,34	10,60	4,82	7,34	10,60	5,62	7,34	10,60							
REVESTIMENTO	m²	0,15	0,30	0,45	0,15	0,30	0,45	0,15	0,30	0,45	0,15	0,30	0,45	0,15	0,30	0,45	0,15	0,30	0,45	0,15	0,30	0,45							

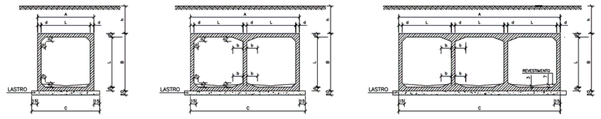

DETALHE DA JUNTA DE DILATAÇÃO

TABELA DAS DIMENSÕES E DOS QUANTITATIVOS DOS MATERIAIS PARA AS GALERIAS
DRENAGEM PARA TRANSPOSIÇÃO DE TALVEGUES

TABELA DAS ARMADURAS (POR METRO DE GALERIA)

0 a h ≤ 100						100 a h ≤ 250						250 a h ≤ 500						500 a h ≤ 750						750 a h ≤ 1000						1000 a h ≤ 1250						1250 a h ≤ 1500					
fck ≥ 0,09 MPa						fck ≥ 0,10 MPa						fck ≥ 0,13 MPa						fck ≥ 0,20 MPa						fck ≥ 0,23 MPa						fck ≥ 0,29 MPa						fck ≥ 0,34 MPa					
Nº	Ø	Q	COMP.	ESP.	Nº	Ø	Q	COMP.	ESP.	Nº	Ø	Q	COMP.	ESP.	Nº	Ø	Q	COMP.	ESP.	Nº	Ø	Q	COMP.	ESP.	Nº	Ø	Q	COMP.	ESP.	Nº	Ø	Q	COMP.	ESP.	Nº	Ø	Q	COMP.	ESP.
1	6,3	20	84	c/20	1	6,3	20	84	c/20	1	---	---	---	---	1	---	---	---	---	1	---	---	---	---	1	---	---	---	---	1	---	---	---	---	1	---	---	---	---
2	---	---	---	---	2	---	---	---	---	2	6,3	20	104	c/20	2	6,3	20	104	c/20	2	---	---	---	---	2	---	---	---	---	2	---	---	---	---	2	---	---	---	---
3	---	---	---	---	3	---	---	---	---	3	---	---	---	---	3	6,3	20	118	c/20	3	6,3	20	118	c/20	3	6,3	20	118	c/20	3	6,3	20	118	c/20	3	6,3	20	118	c/20
4	12,5	6	225	c/16	4	10,0	8	225	c/13	4	10,0	10	235	c/10	4	12,5	9	235	c/11	4	12,5	10	245	c/10	4	16,0	7	245	c/13	4	16,0	9	245	c/11	4	16,0	9	245	c/11
5	12,5	12	CORR.	---	5	---	---	---	---	5	---	---	---	---	5	---	---	---	---	5	16,0	12	CORR.	---	5	16,0	12	CORR.	---	5	16,0	12	CORR.	---	5	---	---	---	---
6	---	---	---	---	6	16,0	8	CORR.	---	6	16,0	8	CORR.	---	6	16,0	8	CORR.	---	6	---	---	---	---	6	---	---	---	---	6	---	---	---	---	6	---	---	---	---
7	12,5	6	225	c/16	7	10,0	9	225	c/11	7	10,0	10	235	c/10	7	12,5	10	235	c/10	7	12,5	10	245	c/10	7	16,0	8	245	c/12	7	16,0	9	245	c/11					
8	6,3	63	CORR.	c/20	8	6,3	72	CORR.	c/20	8	6,3	72	CORR.	c/20	8	6,3	72	CORR.	c/20	8	6,3	72	CORR.	c/20	8	6,3	72	CORR.	c/20	8	6,3	72	CORR.	c/20	8	6,3	72	CORR.	c/20
9	---	---	---	---	9	10,0	6	365	c/24	9	10,0	7	365	c/30	9	12,5	7	365	c/30	9	12,5	6	405	c/24	9	12,5	8	405	c/24	9	12,5	10	405	c/20	9	12,5	10	405	c/20
10	---	---	---	---	10	10,0	12	220	c/34	10	10,0	13	220	c/30	10	12,5	13	220	c/30	10	12,5	12	235	c/34	10	12,5	17	220	c/24	10	12,5	20	235	c/20	10	12,5	20	235	c/20
11	6,3	10	225	c/20	11	6,3	10	225	c/20	11	6,3	13	235	c/15	11	6,3	13	235	c/15	11	6,3	20	245	c/10	11	6,3	20	245	c/10	11	6,3	20	245	c/10	11	6,3	20	245	c/10
12	10,0	9	CORR.	c/20	12	---	---	---	---	12	---	---	---	---	12	---	---	---	---	12	---	---	---	---	12	---	---	---	---	12	---	---	---	---	12	---	---	---	---
13	12,5	8	225	c/24	13	---	---	---	---	13	---	---	---	---	13	---	---	---	---	13	---	---	---	---	13	---	---	---	---	13	---	---	---	---	13	---	---	---	---
14	12,5	8	445	c/24	14	---	---	---	---	14	---	---	---	---	14	---	---	---	---	14	---	---	---	---	14	---	---	---	---	14	---	---	---	---	14	---	---	---	---

RESUMO				RESUMO				RESUMO				RESUMO				RESUMO				RESUMO				RESUMO			
Ø	Kgm	PESO (Kg)		Ø	Kgm	PESO (Kg)		Ø	Kgm	PESO (Kg)		Ø	Kgm	PESO (Kg)		Ø	Kgm	PESO (Kg)		Ø	Kgm	PESO (Kg)		Ø	Kgm	PESO (Kg)	
6,3	0,252	27		6,3	0,252	29		6,3	0,252	32		6,3	0,252	32		6,3	0,252	38		6,3	0,252	38		6,3	0,252	38	
10,0	0,624	6		10,0	0,624	55		10,0	0,624	65		12,5	0,988	99		12,5	0,988	99		12,5	0,988	99		12,5	0,988	84	
12,5	0,988	93		16,0	1,570	14		16,0	1,570	14		16,0	1,570	14		16,0	1,570	21		16,0	1,570	79		16,0	1,570	90	
TOTAL		120Kg		TOTAL		98Kg		TOTAL		111Kg		TOTAL		145Kg		TOTAL		158Kg		TOTAL		216Kg		TOTAL		212Kg	
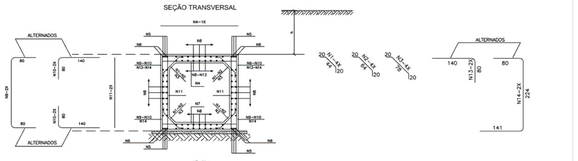
SEÇÃO TRANSVERSAL